AERMEC

la prima per il clima

INVERTER TECHNOLOGY

USE AND INSTALLATION MANUAL

MVA

1000V - 1400V

AERMEC
COMPANY QUALITY SYSTEM
ICIM
ISO 9001:2008 - Cert. n° 0128
CISQ
IQNet
AERMEC S.P.A.

CE

EN

5389861_02

Dear customer,
Thank you for choosing an AERMEC product. It is the fruit of many years of experience and special design studies and has been made of the highest grade materials and with cutting edge technology.
The quality level is being constantly monitored, so AERMEC products are synonymous with Safety, Quality and Reliability.

The data may undergo modifications considered necessary for the improvement of the product, at any time and without the obligation for any notice thereof.

Thank you once again.
AERMEC S.p.A.

SUMMARY

1. WARNINGS 3

2. MATERIALS PROVIDED WITH THE UNIT 4

3. TECHNICAL DATA 5

4. ACCESSORIES 6

5. RECEIPT OF PRODUCT 7
5.1. PRODUCT IDENTIFICATION 7

6. TECHNICAL SPACES MM(IN) 7
6.1. DIMENSION OF THE INDOOR UNIT 7
6.2. LABEL PACKAGING 7

7. MECHANICAL INSTALLATION 8

8. COOLING CONNECTIONS 10
8.1. FITTING THE REFRIGERANT LINES 10
8.2. CONDENSATE DISCHARGE 11

9. ELECTRICAL WIRINGS 12
9.1. POWER CONNECTION 13
9.2. SERIAL CONNECTION 14
9.3. WIRING DIAGRAM MVA1000V - MVA1400V 15
9.4. WIRING DIAGRAM KEY 16

10. CHECKING AND FIRST START 17

11. MAINTENANCE 17
11.1. ORDINARY MAINTENANCE 17

12. DISPOSAL 18

13. TROUBLESHOOTING 18
13.1. ALARM CODE DISPLAY 19

14. USING THE CONTROL PANEL 21
14.1. FUNCTIONS AVAILABLE VIA THE MACHINE'S ON BOARD PANEL 23

All specifications are subject to change without prior notice. Although every effort has been made to ensure accuracy, Aermec shall not be held liable for any errors or omissions.

1. WARNINGS

- The unit and its accessories must only be installed and wired by professionals with the necessary technical qualifications in installation, conversion, extension and maintenance of the systems and who are trained to perform operational and safety checks on these systems. In this manual, these will generally be referred to as "Personnel with specific technical skills".
- This air conditioner must be installed according to national plant engineering regulations. Particular attention must be paid to safety guidelines and to ensuring that the wiring is correctly connected: incorrect wiring connection could result in supply cables, plug or power socket overheating, which could present a fire risk.
- Ensure that the air conditioner is connected to the power supply or to a power socket with the correct voltage and frequency. Using power supplies with the incorrect voltage and frequency could damage the unit and consequently risk starting a fire. The voltage must be stable, without major fluctuations.
- Install on a solid surface which can bear the weight of the air conditioner. Check the support is securely installed and the unit is absolutely stable after operating for a long time.
- To protect the unit against short circuits, fit a thermomagnetic isolator switch to the power line with a minimum contact gap of 3mm on both poles.
- The isolator switch and any plug must be installed in an easily accessible position.
- To ensure good drainage, the condensate discharge pipes must be correctly installed, following the installation instructions. Adopt the most suitable measures to avoid heat dispersion and the consequent formation of condensate. Incorrect installation of the pipes can result in water leaks, wetting furniture and other items in the room.
- Do not install the unit in a location where it could be affected by inflammable gas leaks or deposits of materials which are inflammable, explosive, poisonous, corrosive or hazardous substances. Do not use naked flames near the units. Risk of fire or explosion. Install the unit in a location with minimal levels of dust, fumes, humidity and corrosive agents in the air.
- Do not install in laundries.
- When installing the unit, allow sufficient technical clearance around the unit for maintenance.
- When installing the unit, ensure that the dimensions and weight of the unit are visible. Respect the dimensions stipulated in this manual with regards to the refrigerant line length, the height difference between the units, and the siphons to install along the refrigerant lines.
- For the outdoor unit, choose a location where the noise and air jets will not disturb the neighbours.
- For the outdoor unit, choose a location which will not disturb the flow of pedestrians and which is in accordance with local architectural regulations.
- Avoid obstructing the air flow in and out of the indoor and outdoor units.
- Do not make any modifications to the unit! Do not attempt to repair the unit alone, this is extremely dangerous! Incorrect operations could cause electric shocks, water leaks, fires etc. Contact your After Sales Service, these operations must only be carried out by "Personnel with the specific technical skills".
- Ensure that the power supply and the installed output are adequately scaled to supply the air conditioner correctly.
- Before operating the air conditioner, ensure that the electric cables, condensate discharge pipes and cooling connections have been correctly installed to avoid the risk of water leaks, refrigerant gas leaks and electric shocks.
- The air conditioner must be correctly earthed. Do not connect the earth cable to the gas or water pipes, to the lightning conductor, or to the earth cable of the telephone. Incorrect earthing could cause electric shocks.
- Do not handle the air conditioner or touch the keys with wet hands. Risk of electric shocks.
- The unit and the isolator switch must be turned off before carrying out maintenance work or cleaning. The rotation of the fans inside the unit can cause injury.
- Check that the power supply is disconnected before carrying out any operations on the unit.
- Do not place objects on the outdoor unit and do not climb on top of it.
- For the power supply, use undamaged cables with a section that is suitable for the load.
- Stranded cables can only be used with crimping terminals. Check the wire strands are well inserted.
- Take care when stretching the supply and connection cables around the units: the cables must not be subject to mechanical stress. The cables must be protected.
- Do not make connections on the power supply cable: use a longer cable. Junctions can cause overheating and/or fires.
- If the power supply cable is damaged, it must be replaced by the manufacturer, After Sales Service or by another similarly qualified person, to avoid dangerous situations.
- Do not leave any cables in direct contact with the refrigerant pipes as they could reach high temperatures and moving parts, such as the fans.
- If the units are installed in a location exposed to electromagnetic interference, shielded twisted pair cables must be used for the communication connections between the units.
- To avoid communication errors between the units, ensure that the communication line cables are correctly connected to their respective terminals.
- Periodically check that the installation conditions of the unit have not been altered: have the system checked by "Personnel with specific technical skills".
- Install the indoor unit and the remote control at least 1 metre away from electrical appliances, TV, radio, and stereo equipment etc.
- After completing the electrical wirings, carry out a test. This operation must only be carried out by "Personnel with specific technical skills".
- Once started, the air conditioner must not be switched off for at least 5 minutes to prevent the return of oil to the compressor.
- The wiring diagrams are subject to continuous updates, so it is essential to use those on the machine as your reference.
- Only replace the fuses with others identical to the original ones.
- Allow a minimum distance of 1.5 metres between the units and any inflammable surfaces.
- This appliance can be used by children aged from 8 years and above and persons with reduced physical, sensory or mental capabilities or lack of experience and necessary knowledge if they are supervised or have received instructions concerning use of the appliance in a safe way and understand the hazards involved. Children should not play with the appliance. Cleaning and maintenance intended to be performed by the user should not be performed by children without supervision.
- Do not dismantle or repair the unit while it is in operation.
- Do not obstruct the air flow in and out of the indoor and outdoor units. A reduction in the air flow reduces the effectiveness of the air condi-

tioner, and causes breakdowns and malfunctions.

- Do not spray or throw water directly onto the unit. Water may cause electric shocks or damage to the unit.
- Do not drop the remote control and do not press the keys with pointed objects: this could damage the remote control.
- Do not pull or deform the supply cable. If the cable is pulled or used inappropriately, the unit could be damaged and there is a risk of electric shock.
- Adjust the room temperature correctly to obtain a comfortable environment.
- Switch off the power supply if the air conditioner is not to be used for a long time. When the power supply switch is turned on, electricity is consumed even if the system is not operating.
- Do not leave the doors or windows open for long periods when the air conditioner is operating. The yield in Heating or Cooling mode is reduced if doors or windows are kept open.
- Position devices such as TV, radio, stereo, etc. at a distance of at least 1 metre from the indoor unit and the remote control. There may be some audio and video interference.
- If there is a power cut, when the power is restored the air conditioner will restart with the settings previously stored in the memory.
- Only use the remote control to adjust the air flow; do not force the fins into position with your hands.
- Do not direct the air jet straight at your body. Avoid heating or cooling the air excessively. This may cause health problems.
- Do not direct the air flow straight at animals and plants.
- Do not remove the protection grilles. Do not insert your hands, or any objects, into the sockets or air vents.
- In the event of issues with the air conditioner (e.g. burning smell), turn off the air conditioner and disconnect it from the power supply using the isolator switch. If the anomaly persists, the unit could be damaged and could cause electric shocks or fires. Contact your local After Sales Service.
- Do not use sprays or insecticides on the unit: risk of fire.
- Air the room. We recommend that the room where the air conditioner is installed is periodically aired, especially if many people occupy the room or if there is equipment that uses gas. Insufficient ventilation may result in a lack of oxygen.
- If the air conditioner is being used in a room where there are children, elderly or disabled people or bedridden patients, ensure that the room temperature is appropriate.
- Do not use the air conditioner to store food or to dry clothes.
- If the relative humidity is above 80% (with the doors and windows open) and the air conditioner has been operating in Cooling or Dehumidification mode for a long time, condensate water will probably form on the outlet of the indoor unit. This could cause unwanted dripping.
- Do not under any circumstances insert your fingers or any object into the unit.
- Do not use the main switch or the plug to switch the air conditioner on or off. Use the remote control to turn the air conditioner on and off.
- When operating in Cooling mode, the temperature selected must not be more than 5°C below the outdoor temperature, for optimum comfort and energy saving.
- When heating, select a moderate temperature.
- Limit the room's exposure to direct sunlight using blinds or by leaving the windows ajar.
- Do not place hot devices, flames or other heat sources near the unit. The effectiveness of the air conditioner is reduced, and energy is wasted.
- Clean the air filters once a fortnight.

2. MATERIALS PROVIDED WITH THE UNIT

Component	MVA	
	1000V	1400V
WRC	x1	x1
WLRC	x1	x1
Nut Gas line	x1	x1

3. TECHNICAL DATA

			MVA1000V	MVA1400V
Cooling capacity		kW	10	14
Heating capacity		kW	11	15
Total input power		W	200	200
Dehumidifying volume		l/h		
Fan type		Type	Centrifugal	
Air flow indoor units	Min	m3/h	1400	1400
	Med		1600	1600
	Max		1850	1850
Sound pressure indoor units	Min	db(A)	46	46
	Med		48	48
	Max		50	50
Sound power indoor units	Min	db(A)	56	56
	Med		58	58
	Max		60	60
Connection pipe (Liquid)		mm (inch)	9,52	9,52
Connection pipe (GAS)			15,9	15,9
Diameter condensate drain		mm	31	31
Dimensions indorr units	Height	mm	1870	1870
	Width		580	580
	Depth		400	400
Shipping dimensions	Height		545	545
	Width		2083	2083
	Depth		738	738
Weight Indoor Unit	Net	kg	54	57
	Gross		74	77
Power supply		Type	220-240V~50Hz 208-230V~60HZ	

Cooling (EN-14511 e EN-14825)
Indoor Air Temperature 27°C D.B./ 19 W.B.; Outdoor Air Temperature 35°C; Max Speed; Pipe Length 5m
Heating (EN-14511 e EN-14825)
Indoor Air Temperature 20°C D.B.; Outdoor Air Temperature 7°C D.B./ 6°C W.B.; Max Speed; Pipe Length 5m

4. ACCESSORIES

- **MODBUSGW:** This accessory allows you to manage up to 16 MVA systems (with a maximum total of 128 indoor units), making a serial Modbus available for supervision with an external BMS.
- **BACNETGW:** This accessory allows you to manage up to 16 MVA systems (with a maximum total of 255 indoor units), making a serial Bacnet available for supervision with an external BMS.
- **USBDC:** This kit includes a CANBUS to ModBUS converter and the VRF Debugger software; created to meet the needs of after sales service or authorised technicians who must carry out control and debugging procedures on the MVA range.
- **WRC:** wired Soft-Touch panel this Accessory is supplied as standard with all Indoor Units; it is also possible to purchase an additional WRC Wired Panel to control a single Indoor Unit or set of Indoor Units (up to a maximum of 16), with the same settings from two separate locations.
- **WRC1:** Simplified control wired panel for Indoor Unit with built-in External Contact. This panel is particularly suitable for hotel applications. It can control a single Indoor Unit or a set of Indoor Units (up to a maximum of 16) with the same settings from two separate locations.
- **CC2:** Centralised Control (7" touch screen display), which can be used to manage up to 255 Indoor Units distributed across a maximum of 16 Systems. (Not compatible with models MVAS22401T - MVAS2802T - MVAS3351T).
- **MVASZC:** Simplified Centralised Control (4,3" touch screen display), which can be used to manage up to 32 Indoor Units distributed across a maximum of 16 Systems.

WARNING:
For more information about the features of this accessory or details of its compatibility with MVA systems, refer to the specific documentation describing the accessory itself.

5. RECEIPT OF PRODUCT

5.1. PRODUCT IDENTIFICATION

The rating plate is located inside the unit and shows the identification data and product specification.

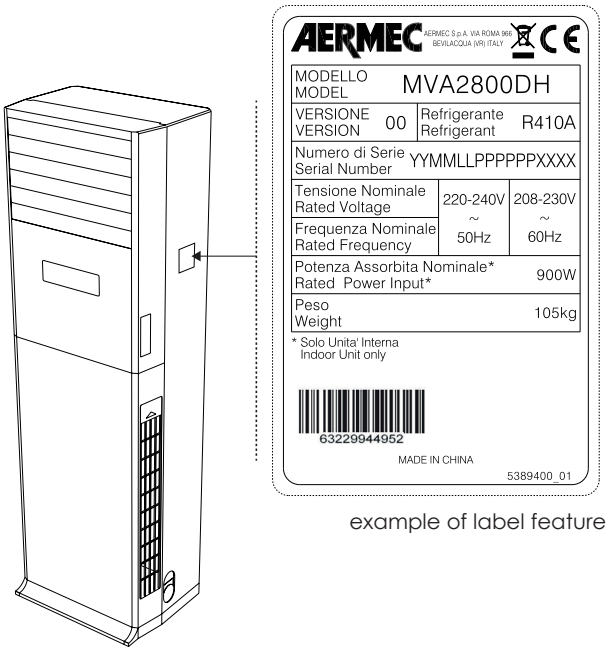

example of label feature

6.2. LABEL PACKAGING

Positioned on the packaging, it shows the product identification data.

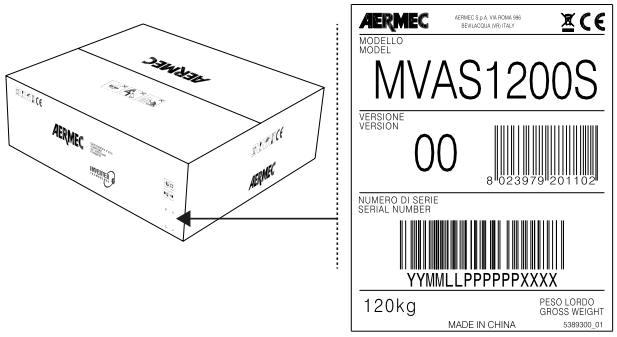

example of label packaging

6. TECHNICAL SPACES MM(IN)

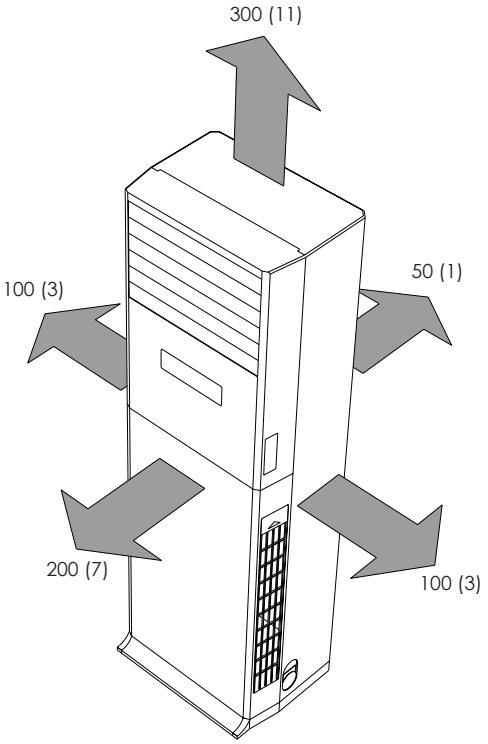

6.1. DIMENSION OF THE INDOOR UNIT

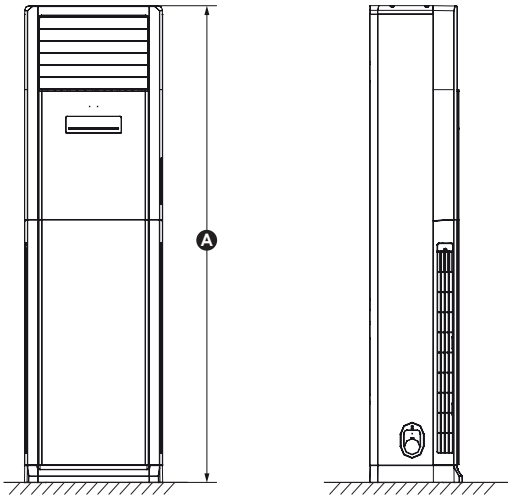

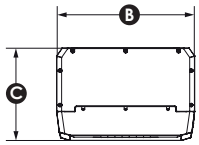

MVA	1000V	1400V
	mm	
A	1870	
B	580	
C	400	
Weight kg	54	57

7. MECHANICAL INSTALLATION

To install the unit you must do the following:

1. Place the unit in the place chosen for installation (Note: the point of installation must meet the guidelines outlined in the chapter concerning the minimum working also must comply with all the limitations expressed in the general instructions);

2. Remove the front panel and the air filter; once you removed you will have access to the refrigerant connections and to the electrical box cover;

3. Remove the electrical box cover to access the terminals of service necessary to connect the power supply, the serial connection and any panel wire supplied (for more information on the electrical connections, refer to the specific chapter); Once wired connections, close the electrical box;

4. Decide which side to pass the refrigerant lines, electrical and for the condensate drain (The unit allows you to have different configurations as shown in the figure);

5. Execute (as indicated in the specific chapters) the refrigerant and water connections;

6. Route the refrigerant lines through the opening and screw in the damper with the screw (as shown in the related image);

7. After making all electrical connections, cooling and hydraulic, fit the filter and the front panel (simply reversing the steps taken to dismantle them);

8. Fix the anchoring system security supplied (according to the sequence shown in the drawings specific);

WARNING: all the cables related to serial links should be kept separate from the power supply cables to avoid electromagnetic interference.

Procedure to remove the front panel and the air filter:
1. Unscrew the screw on the side air intake.
2. pull the lower part of the body containing the filter.
3. Pull the filter upwards.

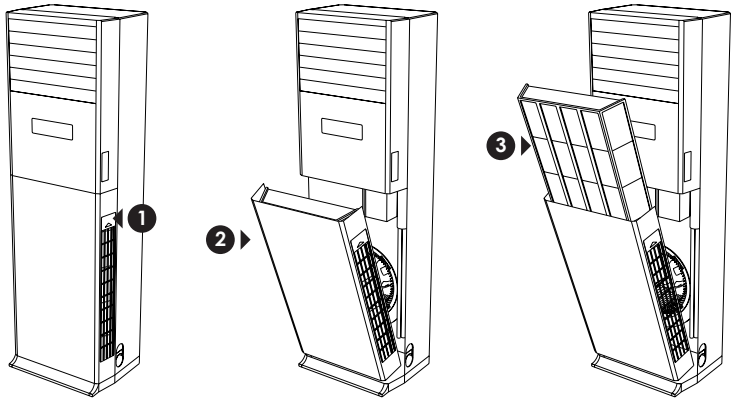

Possible configurations for the passage of the connections:

1. Right side.
2. Left side.
3. Rear.

R410A refrigerant lines

condensate drain

Power supply and serial connection

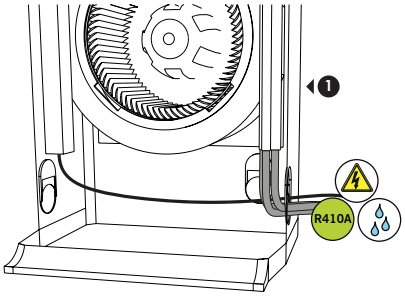

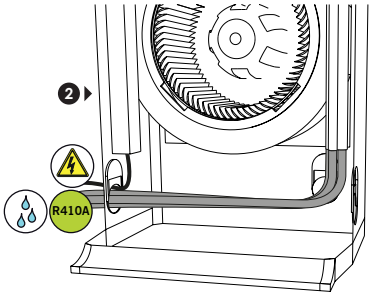

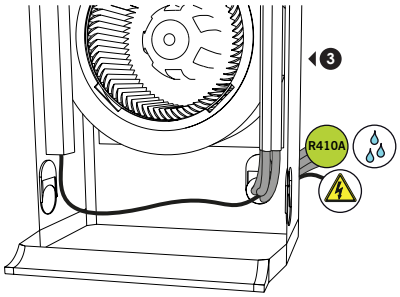

Steps to fix the shutter:

1. Unscrew the screw of the damper selected.
2. After passing the refrigerator lines and other connections through the damper, secure it in the desired position by tightening the screw.

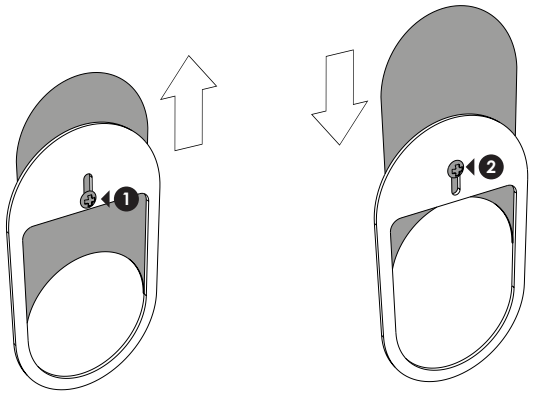

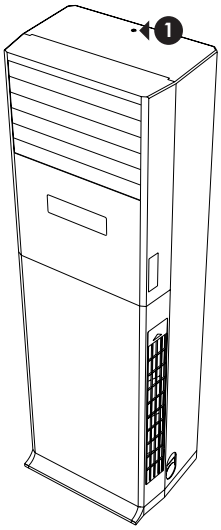

Proceedings to determine the anti-tip device:

1. Unscrew the screw on top of the unit.
2. Place the tilt lock and secure it with the screw removed in the preceding paragraph.
3. attach the security cable to a hook (not supplied) attached properly to the wall.

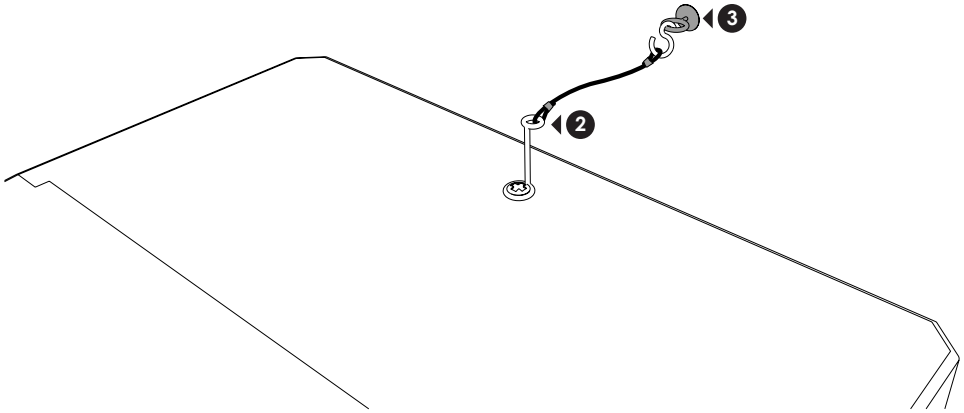

8. COOLING CONNECTIONS

8.1. FITTING THE REFRIGERANT LINES

- Refrigerant R410A
- Use copper pipes for gas and liquid, as indicated in the relative table (see the connection pipes table).
- Before assembling the insulated copper pipes on the refrigerant lines, seal both ends of each pipe to protect the inside from dust and humidity. The inside of the pipes must be perfectly clean and free of any foreign bodies.
- Try to avoid bending the pipes. If you must bend them, the bend radius should be greater than 100mm.
- **The refrigerant lines in multi-split systems must meet strict limitations related to the type of outdoor units used; for more information on the limits and types of refrigerant connections refer to the technical manuals or manual installation of outdoor units.**

The multi-split systems can have systems connecting refrigerator, and joints, which differ according to the type of product; However, once made various refrigerant lines (using accessories giungione refrigerator and gas distribution provided by the system), the connection of indoor units to the remaining lines of the system, follow the following points:

1. Shape the refrigerant lines from the indoor unit until they are at junctions provided on refrigerant lines of the system.
2. Prepare the lines on the side of the indoor units as follows:
   - Accurately measure the inner and outer tube.
   - Use a tube slightly longer than the measurement date.
   - Cut the copper tube to length with the cutter and smooth the ends using a pipe reamer (Fig. A);
   - Insulate pipes and fit conical nuts before running the collar end of the tubes (Fig. B);
   - To perform the collars tapered at 45 ° using a conical tool for edging (Fig. C);
   - Deburring the inside of tubes
   - During the reaming, the pipe end must be higher of the reamer to prevent the entry of dust in the pipe.
   - Be sure the inside of the pipe is clean and free of residuals.
   - Verify that the conical surface is in alignment with the tube, smooth, free of fractures and with uniform thickness (Fig. D).
3. Check the height difference of the indoor and outdoor units to assess the need of one or more siphons on refrigerant lines (for more details refer to the section)
4. Before making the union of the lines with the unit, make sure that the position is final.
5. Clean the surfaces of the joints so as to ensure perfect contact between the clamping surfaces.
6. Lubricate with a thin layer of oil to the motor connections inside and outside.
7. Connect and tighten the refrigerant lines at the indoor unit, use a key and to avoid twisting the pipes (Fig. E).
8. Observe the tightening torque indicated in the table:

Ø	Pipe thickness	Tightening torque
1/4"	≥0,8	15 - 20
3/8"	≥0,8	30 - 40
1/2"	≥0,8	45 - 55
5/8"	≥0,8	60 - 65
7/8"	≥0,8	

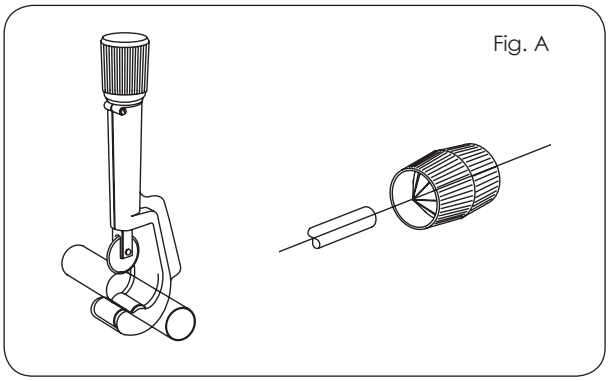
Fig. A

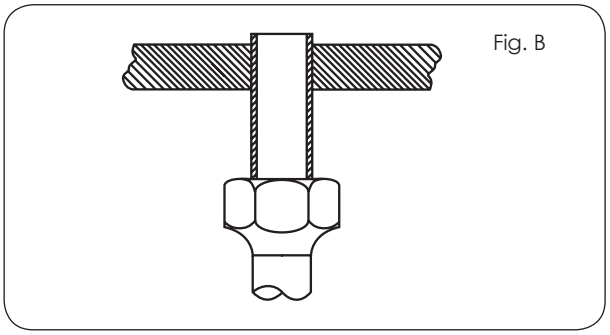
Fig. B

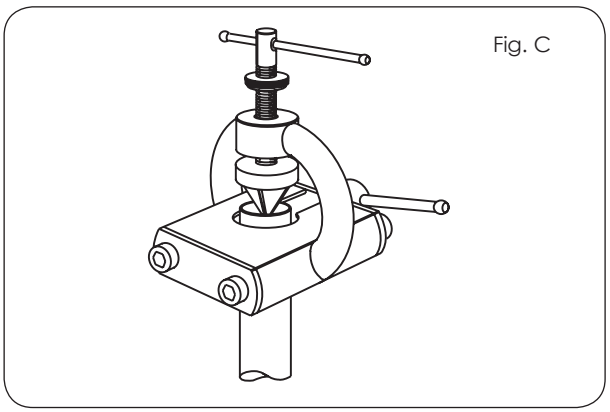
Fig. C

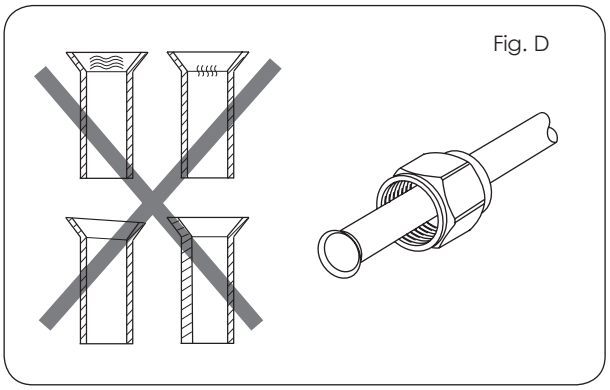
Fig. D

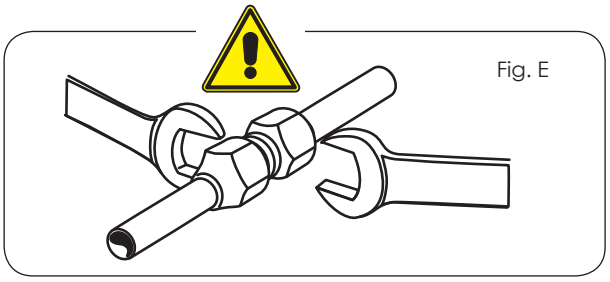
Fig. E

- When connecting the indoor unit to the connection pipe, do not force the couplings on the indoor unit, as this could cause cracks in the capillary pipes and other pipes on the indoor unit, causing them to leak.
- The connection pipe must be supported by a suitable bracket. The unit should not bear the weight of the pipe.
- To avoid leaks and the formation of condensate on the connection pipes, these must be covered in thermal insulation material bound with adhesive tape and insulated from the air.
- The connection joint with the indoor unit must be wrapped in thermal insulation. There must be no gaps between the pipe connection and the wall of the indoor unit.
- After wrapping the pipes in protective material, they should never be bent at an acute angle as this could crack or break them.
- Use adhesive tape to cover the pipes:
  - Use adhesive tape to bind together the connection pipes and the cables. To prevent condensate flowing out of the discharge pipe, separate the discharge pipe from the connection pipe and cables.
  - Use thermal insulating tape to bind together the pipes from the bottom of the outdoor unit to the upper end of the pipe where it enters the wall. When using insulating tape, the final wrap should half cover the first wrap of tape.

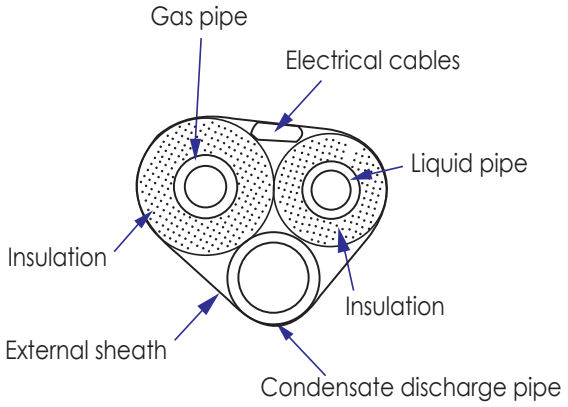

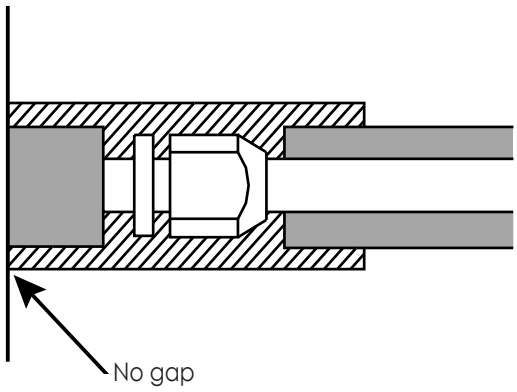

Indoor unit	Connection Pipe	
	GAS mm(inch)	LIQUID mm(inch)
MVA1000V	15,9(5/8")	9,52(3/8")
MVA1400V	15,9(5/8")	9,52(3/8")

8.2. CONDENSATE DISCHARGE

- The condensate discharge hose can be positioned on the left or right (removing the relevant knockout from the casing) or to the rear as previously indicated.
- The diameter of the condensate discharge hose must be the same as - or greater than - the diameter of the connection pipe.
- Seal the connections and wrap with insulating material to prevent the formation of condensate on the external surfaces of the pipe
- Keep the condensate discharge hose short and tilt it downwards with a gradient of at least 1:100.
- Do not bend the condensate discharge hose.
- After connecting the hose, check that the condensate water flows freely
- To check the drainage, pour water into the condensate discharge tray.
- Check that the condensate water drains correctly. The connection of the condensate discharge hose must be leak-free

9. ELECTRICAL WIRINGS

- Before carrying out any work, switch off the power supply to the air conditioner.
- All the parts and materials supplied on site must comply with the local laws and regulations.
- All the connection lines must comply with the electrical wiring diagram. Incorrect connection could cause the air conditioner to malfunction or suffer damage. The wiring diagrams are subject to continuous updates, so it is essential to use those on the machine as your reference.
- The unit and its accessories must only be installed and wired by professionals with the necessary technical qualifications in installation, conversion, extension and maintenance of the systems and who are trained to perform operational and safety checks on these systems. In this manual, these will generally be referred to as "Personnel with specific technical skills".
- In the specific case of electrical wirings, the following must be checked:
  - Measurement of the electrical system insulation strength.
  - Continuity of the protection wires.
- To protect the unit against short circuits, mounted on the supply line of an thermo-magnetic isolator switch (IG) with a minimum contact separation of at least 3mm in all poles. Respect the measurements given in the table.
- Check the earth cable is connected to the earthing system of the building itself.
- Ensure that the installation is wired in compliance with the laws and standards in force, and with the instructions in this manual.
- If the power supply cables, earth cables, communication cables or wired panel cables are damaged, they must be replaced with cables with the same specifications. Have repairs carried out by "Personnel with specific technical skills".
- Ensure that the air conditioner is connected to the power supply or to a power socket with the correct voltage and frequency as indicated on the data plate. Using power supplies with the incorrect voltage and frequency could damage the unit and consequently risk starting a fire. The voltage must be stable, without major fluctuations.
- The available electric power should be sufficient to supply the air conditioner.
- The power supply cable should be safe and secure, in order to avoid damage caused by pulling out the cable terminal.
- Do not make junctions on the power supply cable: use a longer cable. Replacement cables must have the same specifications. Junctions can cause overheating and/or fires. Have repairs carried out by "Personnel with specific technical skills".
- All the power supply lines must use terminals with wire-end ferrules or single-wire terminals. Stranded cables without wire-end ferrules could cause electrical bridges.
- Do not leave any cables in contact with the cooling pipe, the compressor or moving parts such as the fans.
- Do not modify the circuits inside the air conditioner. The manufacturer cannot be held responsible for any damage or malfunction due to incorrect line connections.
- Before accessing the terminals all of the power supply circuits need to be connected.
- The air conditioner is a Class I electrical appliance, so it is essential to provide a reliable earthing connection.
- The yellow and green wire in the air conditioner and the earth wire cannot be used for other purposes. The cable cannot be secured with a screw through the wire as this could result in an electric shock.
- The user must provide a safe earthing connection. Check the earth cable is connected to the earthing system of the building itself.
- Check a suitable differential switch is installed for earthing electrical discharge. Do not connect the earth cable to the following components:
  - Water pipes
  - Gas pipes
  - Drain pipes
  - Lightning conductor
  - Telephone earth cable
  - Other locations considered unsafe by "Personnel with specific technical skills".

Indoor unit	Power supply	Breaker recommended	Section minimum recommended	
			Earth	Line (N° pole x mm²)
MVA1000V	220-240V~50Hz 208-230V~60HZ	6	1	2 x 1
MVA1400V	220-240V~50Hz 208-230V~60HZ	6	1	2 x 1

NOTE:

• Circuit Breaker and Power Cord Specifications are selected according to the Rated Power Input (Rated Current Input) of the Unit. Rated Power Input (Rated Current Input) is "Maximum" Power Input ("Maximum" Current Input) of the Unit according to EN 60335-1 and EN 60335-2-40

• The Power Cord Specifications are Minimum Specifications based on a Multi-Core Copper Cable in conduit on a wall with Ambient Temperaure 40°C, Working Conductor Temperature 90°C and Max Lenght 15m according IEC 60364-5-52 (e.g. Multi-Core Copper Cable with XLPE insulated and PVC sheath) If Operationg Conditions are different please calculate and adjust the Power Cord Specifications according to National Standard

• The Circuit Breaker Specifications are based on Ambient Temperature 40°C If Opearting Conditions are different please calculate and adjust Circuit Breaker Capacity according to the Circuit Breaker Specification provide by manufacturer

• The Circuit Breaker must have magnet trip function and thermal trip function so that the system can be protected from short circuit and overload D-Type Thermal Magnetic Circuit Breaker is advice to be used.

• The Circuit Breaker must have a contact separation of at least 3mm in all poles

9.1. POWER CONNECTION

- Each indoor unit must be connected to the electrical power supply line, as shown in the connection diagrams.
- Power cable: use a cable with the characteristics shown in the table of this manual
- To protect the unit against short circuits, always fit the power switch pole breaker with minimum contact distance of at least 3mm in all poles.

Connecting cables multipolar:

1. Access the terminals dedicated to food (XT1) inside the electrical box; Access to the terminal you must first remove the front hood, the air filter and finally the electrical box cover itself (as shown in the figures).
2. Use a stripping tool to remove the insulation layer (10mm long) from the end of the cable.
3. Using pliers for crimping, applying a terminal (compatible with the size of the terminal board) at the end of each node of the cable.
4. Remove the screw on the terminal block.
5. Insert the cable end into the terminal and secure the screw.

WARNING: all the cables related to serial links should be kept separate from the power supply cables to avoid electromagnetic interference.

Procedure to remove the front panel and the air filter:

1. Unscrew the screw on the side air intake.
2. pull the lower part of the body containing the filter.
3. Pull the filter upwards.

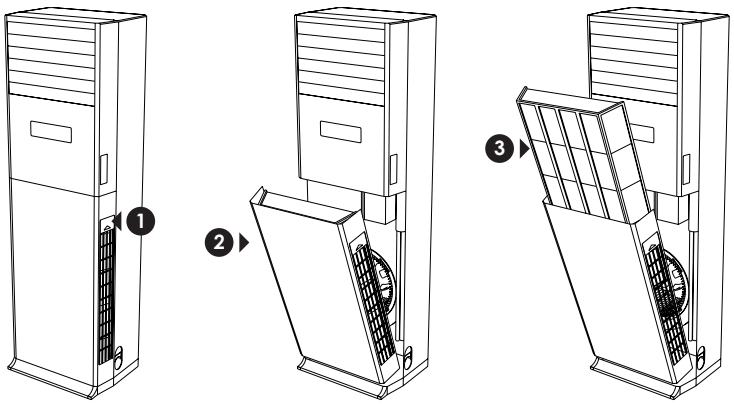

Procedure to remove the electrical box cover:

1. Remove the screws that secure the cover and the cover channel.
2. Remove the cover by pulling the front.

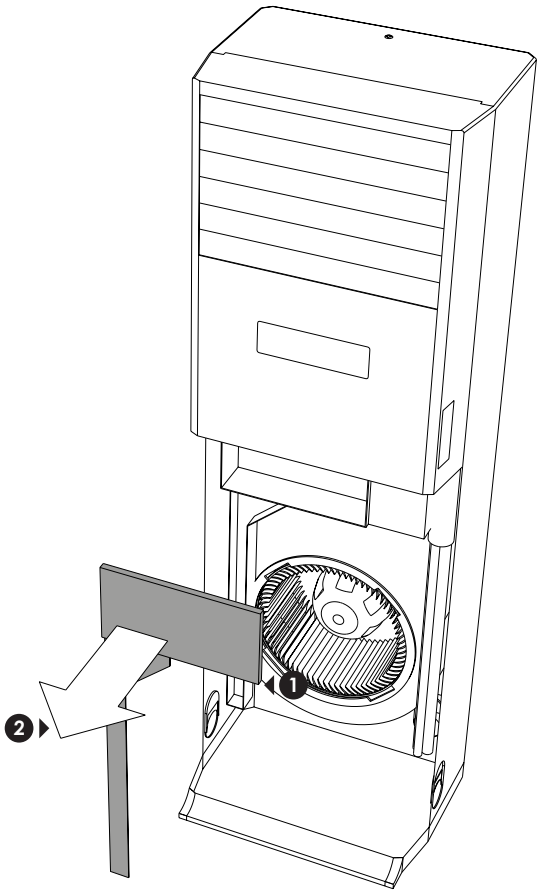

9.2. SERIAL CONNECTION

The units of a multi-split system, communicate with one another in such a way as to coordinate the operating parameters necessary for the proper operation of the entire system; to enable this communication is necessary to create a point-to-point, the outdoor unit to each unit's internal system (as shown in the diagram); please note that this serial line must end with a "termination resistor", which will be connected to the final unit of the system (such resistance is supplied with the outdoor unit).

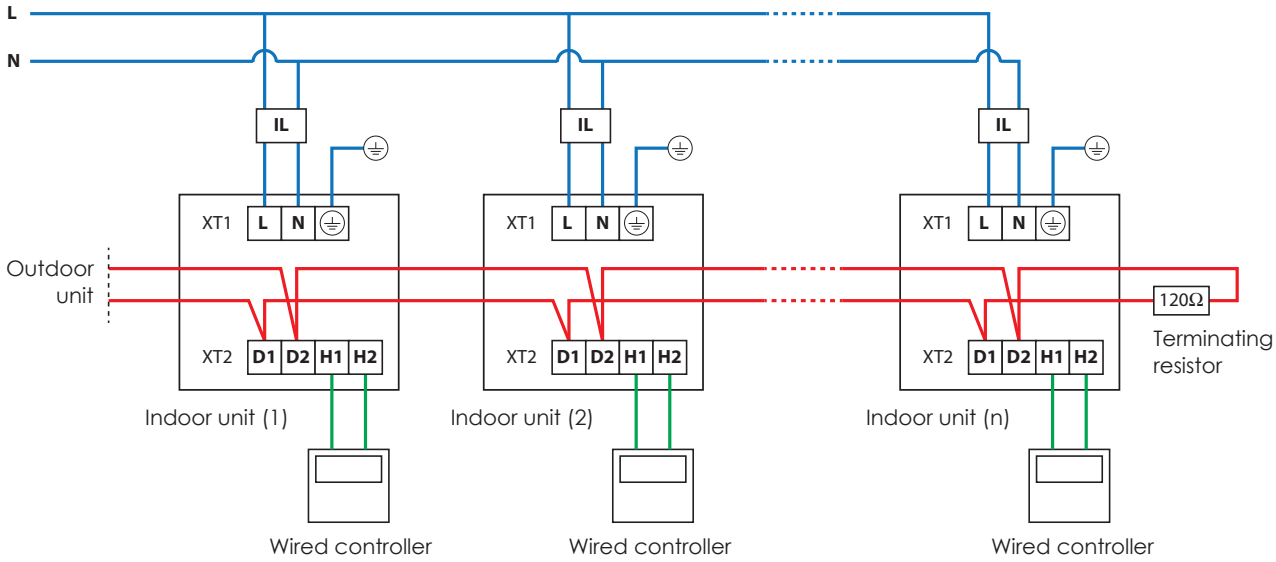

Key:
IG: switch (protection line);
IL: circuit breaker (protection unit);
XT1: terminal power (220-240V ~ 50Hz);
XT2: terminal for serial connection;
D1 / D2: terminals for serial communication;
H1 / H2: terminals for connecting the control panel;

Power supply
Serial connection
Wired pannel connection

Connection type	Max lenght m	Note	Section minimum recommended
Wired pannel connection	250	**NOTE: For more information about length limitations, and about the kinds of installation, cable connection, refer to the manual for the panel flush;** • The cable should be a two-pole isolated twisted; • If the unit is installed in an environment with a lot of electromagnetic interference, it is recommended to use shielded cable	2 x 0,75 ~ 2 x 1,25
Serial connection	1000	• If you are using a serial connection cable with a cross section greater than 1mm2 total length can go up to 1500m; • The cable should be a two-pole isolated twisted; • If the unit is installed in an environment with a lot of electromagnetic interference, is to use a shielded cable racccomanda	≥ 2 x 0,75

9.3. WIRING DIAGRAM MVA1000V - MVA1400V

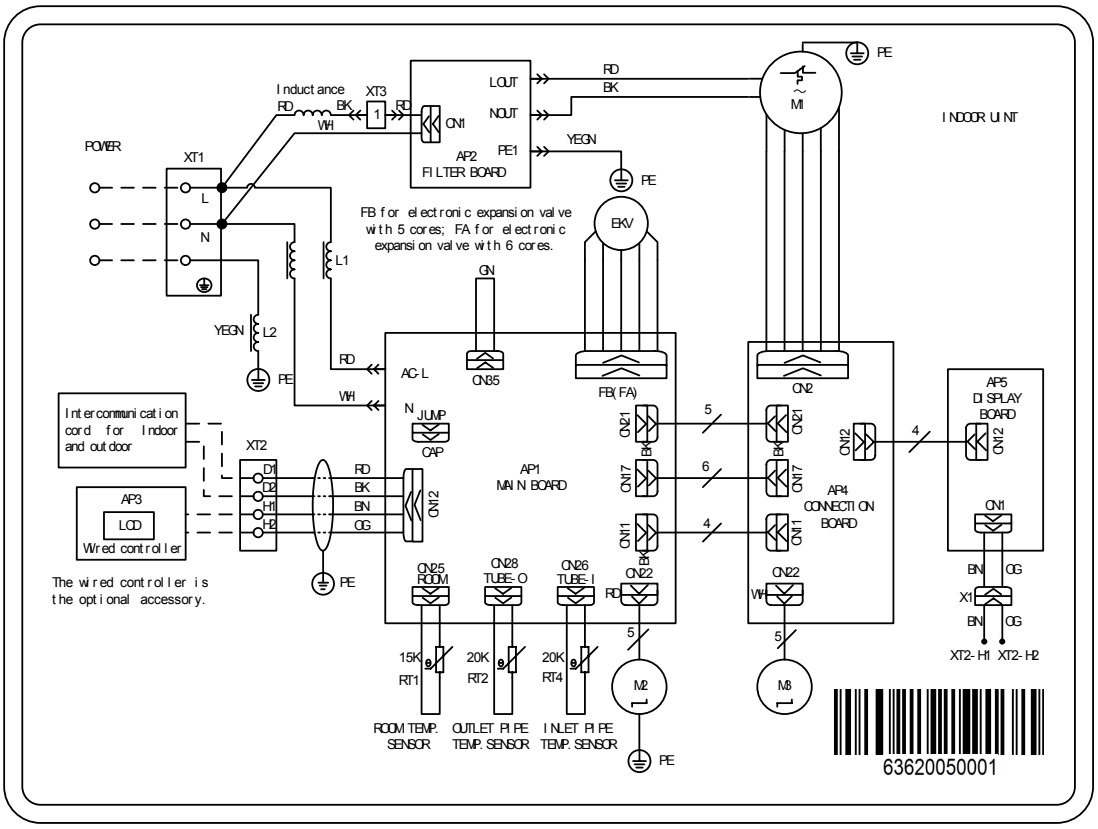

For the need of installation refer necessarily to the wiring diagram supplied with the unit. The circuit diagram along with the manuals, must be carefully preserved and made available for future work on the unit.

NOTE IN CONNECTING THE WRC WIRE PANEL

The unit has a display on the machine from which it is possible to set all its functions, however it is also supplied with a WRC wire panel and a WLRC infrared remote control.
In case you want to use the WRC flush panel to use the unit, you must perform the following procedure:

(1) Physically connect the wire panel to the indoor unit PCB (H1, H2 XT2 terminal board) as indicated in paragraph 9.2;

(2) The alarm message "CP" (control panel conflict) will appear on the display;

(3) While the unit is OFF, press the "Mode" and "Speed" keys simultaneously for 5 seconds to clear the "CP" alarm and enable normal operation (in this configuration the WRC panel will turn out to be the master compared to the display on the machine);

9.4. WIRING DIAGRAM KEY

KEY	DESCRPTION
Indoor unit	internal unity
Power	Power supply
XT1	power Terminal
XT2	Terminal block serial links
M1	Fan motor
M2	Motor outlet fins (SWING)
M3	
AP1 - Main Board	main board
AP2 - Filter Board	Tab filter feeding disorders
AP3 - Wired controller	Attachment control panel
AP4 - Connection Board	connections tab
AP5 - Display board	Display Board Infrared indoor unit
L1 - L2 - Induttance	Inductance
L	Line
N	Neutral
PE	grounding
D1	Terminals serial link
D2	
H1	Terminal connection control panels accessories
H2	
Wired controller	Panels flush command WRC
Optional accessory	not supplied
RT2 - Outlet pipe Temp. Sensor	indoor unit exchanger temperature sensor output
RT4 - Inlet pipe temp. sensor	Temperature probe input indoor unit exchanger
RT1 - Room Temp. Sensor	Room temperature sensor
EKR	Electronic thermostatic valve
WH	White
YEGN	yellow green
RD	red
VT	Violet
GN	green
BN	Brown
BU	blue
BK	black
OG	orange
5-core Electronic expansion valve connect to CN20.	If the unit uses an electronic expansion valve 5 cables will be connected to the FB terminal
6-core Electronic expansion valve connect to CN19.	If the unit uses an electronic expansion valve 6 cables will be connected to terminal FA

10. CHECKING AND FIRST START

Check before:

- Check to make sure that the inlet and outlet are not obstructed by objects on both drives, external and internal.
- Check to make sure that the cable grounding is connected and not damaged.
- Check to make sure the air filter is clean.
- Make sure the remote control batteries are not dead.
- Make sure that the indoor and outdoor units are not damaged and are securely fastened.

All indoor units are set by default as SLAVE units, however, because the system can work is necessary that the system has a unit (and not more than one) MASTER unit, otherwise the display of the indoor unit and / or the panel flush possibly connected to each unit's internal system, it appears by the alarm code L7, which just indicates that the system was not set any master.
Documentation panel flush and the remote control, it is the procedure to set a master unit, but the following is the procedure to do this with the remote control:

1. Get in ventilation mode only;
2. Set the setpoint to 30 ° C;
3. Within 5 seconds, simultaneously press the down arrow and up arrow to 3 times;

If the operation is successful, the display will show the acronym of uni ty internal UC, indicating that the unit has been set as the master;

11. MAINTENANCE

11.1. ORDINARY MAINTENANCE

- **Disconnect the power supply before cleaning the unit**
- **Disconnect the power supply when the air conditioner is off**
- **Do not pour water directly to the unit may cause an electrical shock**
- **Clean the cabinet with a soft, dry cloth or a cloth slightly dampened with water or detergent (do not use solvents)**

NOTES CLEANING FILTER:

- **Do not clean with hot water.**
- **Do not dry the flame.**
- **Do not operate the air conditioner without the air filter.**
- **Do not use brushes or tools drives.**

Cleaning the air filter:
Remove the air filter (as shown in the following figures):

1. Unscrew the screw on the air intake side.
2. extract the lower part of the body containing the filter.
3. Remove the filter upwards.
4. Cleaning the air filter:
- Use a vacuum cleaner
- If heavily soiled, use a mild detergent and water
5. Dry the filter by exposing it to direct sunlight
6. Replace the filter when it is dry
7. Reinstall the air filter:
- Replace the filters.
- Close the panel.

Maintenance after use:

- Disconnect the power supply.
- Clean the filter and the indoor unit.
- Clean the outdoor unit and remove any obstructions from the battery.
- Restore and repaint any rusty surfaces on the outdoor unit.

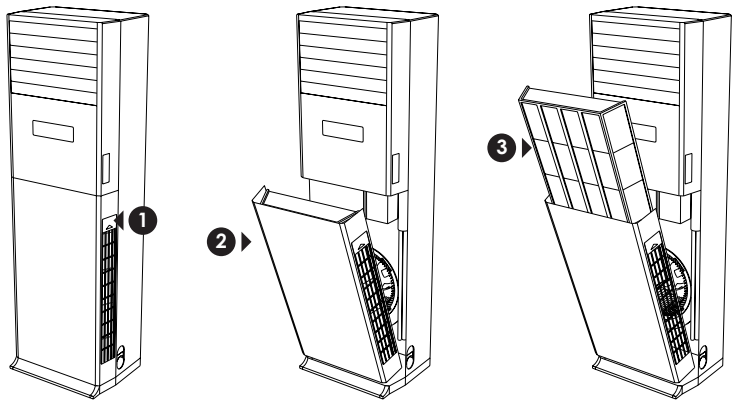

12. DISPOSAL

This marking indicates that this product should not be disposed with other household wastes in the entire EU.
To prevent any harm to the environment or human health caused by incorrect disposal of Waste Electrical and Electronic Equipment (WEEE), please return the device using suitable collection systems, or contacting the retailer where the product was purchased. For further information please contact the appropriate local authority.
Unlawful disposal of the product by the user may result in the application of administrative fines based on current laws.

13. TROUBLESHOOTING

ITEMS TO CHECK	POSSIBLE ANOMALY	SITUATION
Is the unit firmly fixed?	The unit could fall, vibrate or generate noise.	✍
Has a check for refrigerant leaks been performed?	Poor performance.	✍
Is the thermal insulation sufficient?	It could cause condensate and dripping water.	✍
Does the unit correctly drain the condensate water?	It could cause condensate and dripping water.	✍
Does the power supply voltage correspond to the one indicated on the label?	Electrical operating fault or damage to components which could be blown.	✍
Have the cables and pipes been connected correctly and safely?	Electrical operating fault or damage to components which could be blown.	✍
Has the unit been safely grounded via an earth connection?	Risk of electrocution. Damage to components.	✍
Have the guidelines the manual regarding electric cable type and section been followed?	Failure to do so could cause electrical operating faults or damage to components which could be blown.	✍
Are the air inlet and outlet on the indoor unit free of obstacles?	Poor performance.	✍
Have the pipe length and refrigerant charge been recorded?	Poor performance. Impossible to check the amount of refrigerant added.	✍

13.1. ALARM CODE DISPLAY

If malfunctioning occurs during system functioning, the units show the relative alarm code which easily permits to the After-Sales Service Area to identify the cause of errors; such alarm code will appear both on indoor unit (through two-digit display and possibly through the flashing symbols cooling and heating) and on outdoor unit (by flashing LEDs on the electronic board); the following table indicates the alarm codes and their causes.

Code	Alarm description
E0	Error Outdoor unit
E1	High pressure alarm
E2	Low temperature alarm (pressing)
E3	Low pressure alert
E4	Over temperature on the discharge line of a compressor
EC	Temperature alarm on pressing compressor 1
EL	Temperature alarm on pressing compressor 2
EE	Temperature alarm on pressing compressor 3
EF	The compressor discharge temperature alarm 4
EJ	Temperature alarm on pressing compressor 5
EP	The compressor discharge temperature alarm 6
F0	Malfunction of the electronic board on the outdoor unit
F1	Alarm high pressure sensor
F3	Alarm low pressure sensor
F5	The compressor discharge temperature sensor error 1
F6	The compressor discharge temperature sensor error 2
F7	The compressor discharge temperature sensor error 3
F8	The compressor discharge temperature sensor error 4
F9	The compressor discharge temperature sensor error 5
FA	The compressor discharge temperature sensor error 6
FH	Error Sensor current supply compressor 1
FC	Error Sensor current supply compressor 2
FL	Error current sensor power compressor 3
FE	Error Sensor current supply compressor 4
FF	Error Sensor current supply compressor 5
FJ	Error current sensor power compressor 6
FU	Error temperature sensor on the compressor 1
Fb	Error temperature sensor on the compressor 2
J1	Over-current protection on the compressor 1
J2	Over-current protection on the compressor 2
J3	Over-current protection on the compressor 3
J4	Over-current protection on the compressor 4
J5	Over-current protection on the compressor 5
J6	Over-current protection on the compressor 6
J7	Protection 4-way valve
J8	Protection for high pressure

Code	Alarm description
J9	Protection for low pressure
JA	Protection for abnormal pressure
JC	Protection for flow alarms
JL	Protection generic pressure
b1	Error outside air temperature probe
b2	Error temperature sensor 1 for defrosting
b3	Error temperature sensor 2 for defrosting
b4	Probe error subcooling
b5	Subcooling probe error
b6	Probe error in input to the liquid separator
b7	Probe error in output to the liquid separator
b8	Error humidity sensor
b9	Probe error output battery
bA	Error temperature sensor oil return
bH	Error system clock
bC	Thermal protection
bL	Thermal protection
P0	Error management on board inverter compressor
P1	Card malfunction management inverter compressor
P2	Protection of power module inverter compressor
P3	Protection restart inverter compressor
H0	Error on card management fans
H1	Card malfunction management fans
H2	Protection of the power supply module fans
LO	Error unit
L1	Fan guard
L2	Protection electrical resistance
L3	Condensate tray full
L4	Power Failure panel flush
L5	Frost protection
L7	No master set on the system
L8	Insufficient power supply
L9	Too many units in the group
LA	Water temperature sensor error
b4	Probe error subcooling
b5	Subcooling probe error
b6	Probe error in input to the liquid separator
b7	Probe error in output to the liquid separator
b8	Error humidity sensor
b9	Probe error output battery
bA	Error temperature sensor oil return

Code	Alarm description
bH	Error system clock
bC	Thermal protection
bL	Thermal protection
P0	Error management on board inverter compressor
P1	Card malfunction management inverter compressor
P2	Protection of power module inverter compressor
P3	Protection restart inverter compressor
H0	Error on card management fans
H1	Card malfunction management fans
H2	Protection of the power supply module fans
LO	Error unit
L1	Fan guard
L2	Protection electrical resistance
L3	Condensate tray full
L4	Power Failure panel flush
L5	Frost protection
L7	No master set on the system
L8	Insufficient power supply
L9	Too many units in the group
LA	Water temperature sensor error
LH	Air quality alert
LC	Incompatibility between indoor and outdoor units
d1	Error control board unit
d3	Error sensor ambient air
d4	Error temperature sensor input to the battery
d6	Error temperature sensor output to the battery
d7	Error humidity sensor
d8	Water temperature sensor error
d9	Error position jumper cap
dA	Error addressing unit
dH	Error connecting panel flush and controller unit
dC	Error in setting dip switches for selecting the size
dL	Sensor fault ambient air
dE	Error carbon dioxide probe
db	It indicates an active debug mode
A0	Unit waiting because debug mode
A1	Will implement a procedure to control the operating parameters of the compressor
A2	Notice quantity insufficient refrigerant gas
A3	Currently undergoing a defrost cycle
A5	Unit in test mode
A8	Ongoing mode pump down

Code	Alarm description
AJ	Notice to clean the air filter unit
AU	Emergency stop system
Ab	Emergency shutdown system
Ad	Protected mode
U2	Error setting jumper cap on the outdoor unit
U3	Protection on phase sequence of power system
U4	Protection for lack of refrigerant
U5	Error address control board compressor
U6	Alarm malfunction electronic expansion valve
U8	Malfunction on the cooling circuit of the indoor unit
U9	Malfunction on the cooling circuit of the outdoor unit
UC	Master unit set successfully
UE	Adding insufficient gas
UL	Emergency mode
C0	Communication error
C2	Communication error
C3	Communication error
C4	Error quantity refrigerant
C5	Error procedure automatic addressing
C6	Error imposttatzione address of outdoor unit
CH	Error output power
CL	Error output power
CF	Error master
CJ	Generic error Addressing
CP	Error master
CU	Communication error
Cb	Error asseganzione IP address

14. USING THE CONTROL PANEL

All functions of the air conditioner can be set using the machine's on board panel, or with the supplied infra-red remote control, however please note that some functions (such as the settings on the type of environment) are only available via the machine's on board panel.

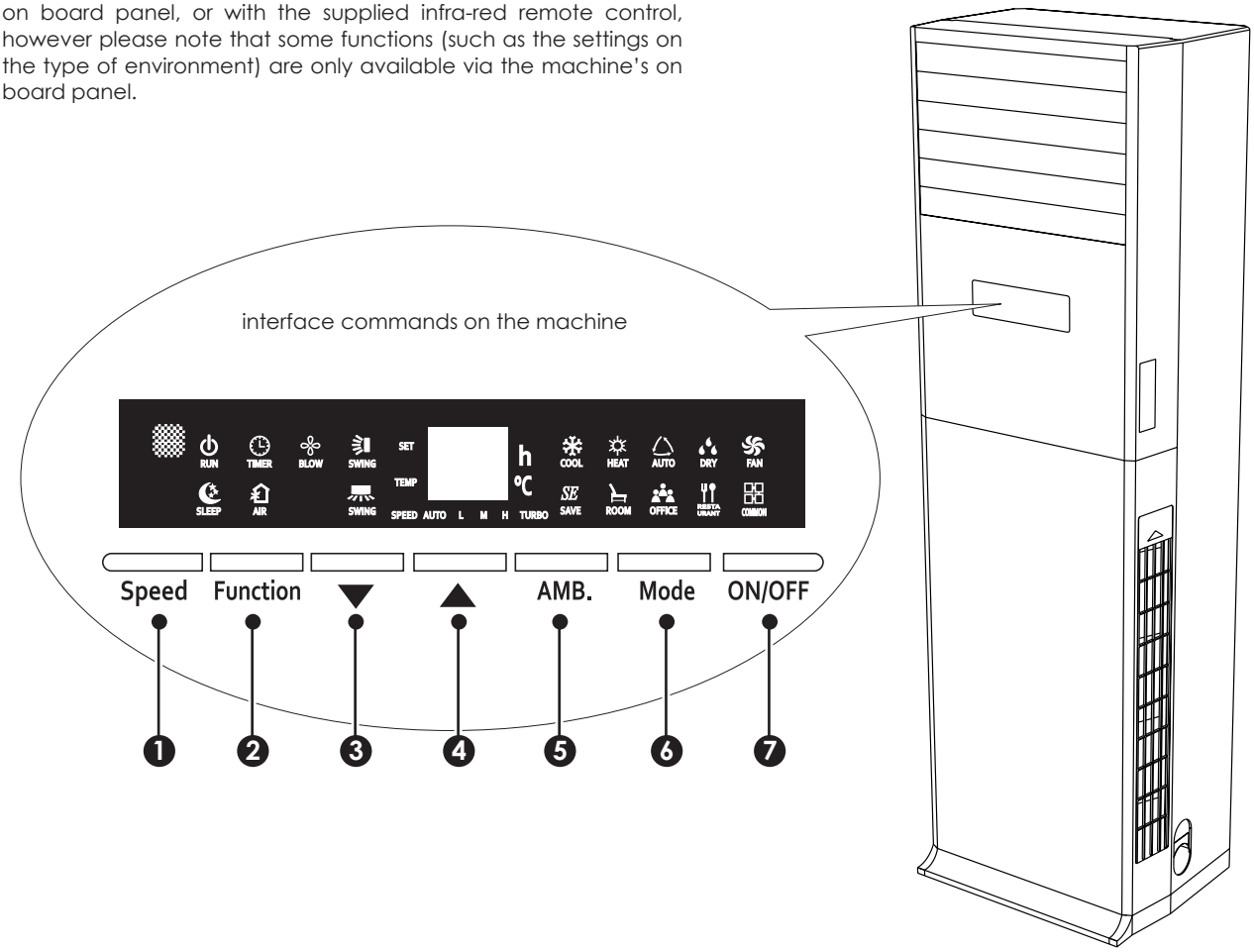

Alarm	Function of the button:
1	Selection of the various fan speeds
2	This button allows to scroll through the various available functions
3	Allows to increase a value, or to activate a function selected with the "Function" key
4	Allows to decrease a value, or to deactivate a function selected with the "Function" key
5	Allows to set an automatic program based on the type of environment in which the unit is installed
6	Allows to select the operating mode
7	Allows to switch the unit ON and OFF:

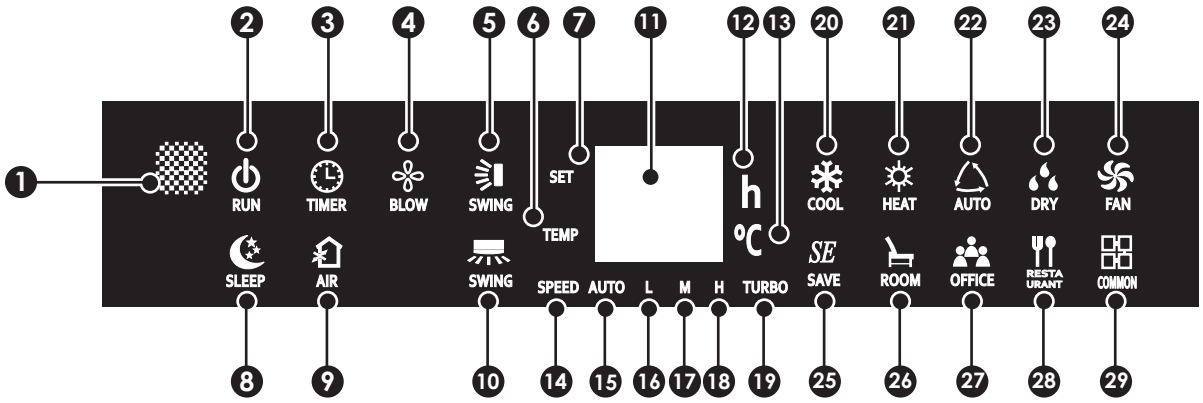

Alarm	Function of the button:
1	Infra-red receiver
2	Indicates the status of the unit
3	If the icon is active, indicates that a timer is set on the system
4	If the icon is active, indicates that the prolonged ventilation has been activated
5	The icon indicates that the continuous vertical swing is active
6	This icon indicates that the figures on the display represent the temperature
7	This icon indicates that the figures on the display represent the current temperature set-point
8	The icon indicates that the night-time comfort function is currently active
9	This icon is not used
10	The icon indicates that the continuous horizontal swing is active
11	Two-digit display
12	Indicates that the hour set for the on or off timer are shown on the display
13	Indicates that a temperature is currently displayed
14	Indicates
15	Indicates that the fans are set to "AUTO" speed
16	Indicates that the fans are set to "MINIMUM" speed
17	Indicates that the fans are set to "MEDIUM" speed
18	Indicates that the fans are set to "MAXIMUM" speed
19	Indicates that the fans are set to "TURBO" speed
20	Indicates that the cooling mode is currently active
21	Indicates that the heating mode is currently active
22	Indicates that the automatic mode is currently active
23	Indicates that the dehumidification mode is currently active
24	Indicates that the fan only mode is currently active
25	Indicates that the energy saving program is currently active
26	Indicates that the home saving program is currently active
27	Indicates that the office saving program is currently active
28	Indicates that the office saving program is currently active
29	Indicates that the common saving program is currently active

14.1. FUNCTIONS AVAILABLE VIA THE MACHINE'S ON BOARD PANEL

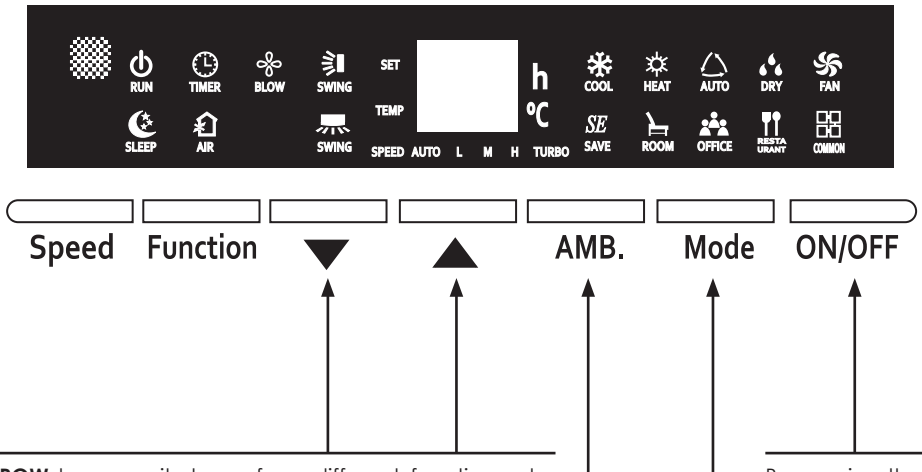

Pressing the **ARROW** key permits to perform different functions, depending on the context in which they are pressed:
• Increase or decrease the temperature set-point, in the modes that permit;
• Allows to scroll through the available functions (after pressing the Function key) on the unit;
• By simultaneously pressing both arrow keys and holding them down for at least 3 seconds, activates the key lock (indicated by the initials LC on the display of the indoor unit);
• Performing one of the available test modes;

WARNING after installing the unit, a heating or cooling test can be run for the first start-up; to perform such tests it is necessary to:

HEATING TEST MODE:
When turning on the unit, press the key (▲) twice within 20s; the heating test will last for 5 minutes (unless interrupted before hand via the OFF button on the machine's panel or on the remote control) and in the event errors occur during the test, the relative code will appear on the display of the indoor unit.

COOLING TEST MODE:
When turning on the unit, press the key (▼) twice within 20s; the heating test will last for 5 minutes (unless interrupted before hand via the OFF button on the machine's panel or on the remote control) and in the event errors occur during the test, the relative code will appear on the display of the indoor unit.

By pressing the **ON/OFF** key it is possible to switch the unit on or off. the colour of the RUN icon changes depending on the status of the unit (red units on standby, green unit on).

Pressing the **Mode** key will select the operating mode to be applied to the unit; Each press of the key will scroll through the available modes in accordance with the following layout:

Each different operating mode enables or disables particular settings:
• **Automatic** (): the temperature set-point and the speed of the fans are automatically set (and can not be changed by the user); the swing of the vertical and horizontal fins will be modified;
Cooling ( ): the temperature set-point, the speed of the fans and functions related to swing of the vertical and horizontal fins will be modified;
• **Dehumidification** (): the temperature set-point and the speed of the fans are fixed; the swing of the vertical and horizontal fins will be modified;
• **Ventilation only** (): The temperature set-point is disabled; the speed of the fans and the swing of the vertical and horizontal fins will be modified;
• **Heating** (): the temperature set-point, the speed of the fans and functions related to swing of the vertical and horizontal fins will be modified;

Pressing the **AMB.** allows to select the operating scenario to be applied to the unit (the operating scenario is a specific automatic program based on the type of environment in which the unit is installed); each press of the key will scroll through the available modes in accordance with the following layout:

WARNING the scenarios can only be set via the machine's on board panel; only the energy saving (SAVE) or the default (COMMON) scenario can be set via remote control

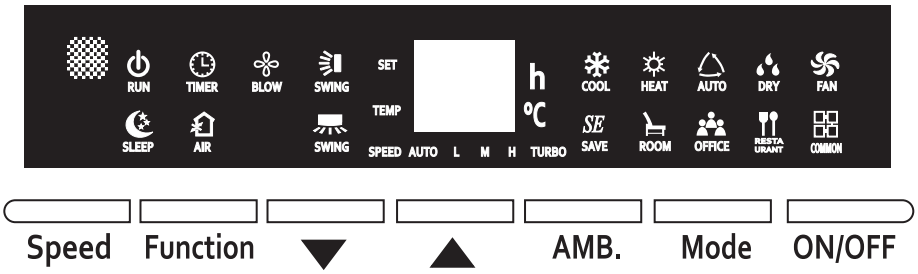

The speed of the fans can be changed by pressing the SPEED key (for modes that permit); there are 5 various speeds available (all indicated by the corresponding icon displayed on the display of the machine's on board panel): auto, low, medium, high and turbo.

The functions available on the unit can be set by pressing the **Function** key; each time this button is pressed, will switch to the next function, according to the following list (warning: the icon flashes to indicate that the function is selected):

(1) Set continuous vertical swing ( ):
the function is enabled by pressing key (▲) and stopped pressing key (▼);

(2) Set continuous horizontal swing ( ):
the function is enabled by pressing key (▲) and stopped pressing key (▼);

(3) Set the continuous ventilation ( ):
the function is enabled by pressing key (▲) and stopped pressing key (▼);

(4) Set the Off timer ( ):
WARNING: the unit can manage two different timers, one for the programmed OFF and one for the ON; if the procedure is performed with the machine on, an Off timer will be set, and if carried out with the machine off, an On timer will be set.
Pressing the key (▲) will increase the number of hours set for the timer, while the key (▼) will decrease the number of hours set for the timer; to confirm the value to be assigned, just press the Function key, passing to the next function or wait for 5 seconds without pressing any key.
Once a timer has been set, the relative icon will remain on indicating that a programmed On or Off is set on the system; to delete a time setting, enter it as mentioned above and set the "blank character" as the new value, which is shown by scrolling all the values up to the value after 24;

(5) Set the night-time comfort function ( ):
the function is enabled by pressing key (▲) and disabled pressing key (▼);

(6) Set the operating set-point for the active operating mode ( ):
pressing the (▲) key increases the operating set-point, while pressing the (▼) key will decrease the operating set-point;

(7) Displays the current room temperature ( ):
pressing the (▲) key or the (▼) key displays the room temperature value on the display of the unit;

I dati tecnici riportati nella presente documentazione non sono impegnativi.
AERMEC S.p.A. si riserva la facoltà di apportare in qualsiasi momento tutte le modifiche ritenute necessarie per il miglioramento del prodotto.

Les données mentionnées dans ce manuel ne constituent aucun engagement de notre part. Aermec S.p.A. se réserve le droit de modifier à tous moments les données considérées nécessaires à l'amelioration du produit.

Technical data shown in this booklet are not binding.
Aermec S.p.A. shall have the right to introduce at any time whatever modifications deemed necessary to the improvement of the product.

Im Sinne des technischen Fortsschrittes behält sich Aermec S.p.A. vor, in der Produktion Änderungen und Verbesserungen ohne Ankündigung durchzuführen.

Los datos técnicos indicados en la presente documentación no son vinculantes.
Aermec S.p.A. se reserva el derecho de realizar en cualquier momento las modificaciones que estime necesarias para mejorar el producto.

AERMEC S.p.A.
I-37040 Bevilacqua (VR) - Italia
Via Roma, 996 - Tel. (+39) 0442 633111
Telefax (+39) 0442 93577
www.aermec.com - info@aermec.com